CH32V003 Datasheet

V1.7

Overview

CH32V003 series is an industrial-grade general-purpose microcontroller designed based on QingKe RISC-V2A core, which supports 48MHz system main frequency, wide voltage, single-wire serial debug interface, low-power consumption and ultra-small package. It provides commonly used peripheral functions, built-in 1 group of DMA controller, 1 group of 10-bit ADC, 1 group of OPA comparator, multiple timers, standard communication interfaces such as USART, I2C, SPI, etc. The rated operating voltage of the product is 3.3V or 5V, and the operating temperature range is -40°C~85°C industrial-grade.

Features

- **Core**
  - QingKe 32-bit RISC-V core, RV32EC instruction set
  - Fast programmable interrupt controller + hardware interrupt stack
  - Support 2-level interrupt nesting
  - Support system main frequency 48MHz
- **Memory**
  - 2KB volatile data storage area SRAM
  - 16KB program memory CodeFlash
  - 1920B BootLoader
  - 64B non-volatile system configuration memory
  - 64B user-defined memory
- **Power management and low-power consumption**
  - System power supply V_{DD}: 3.3V or 5V
  - Low-power mode: Sleep, Standby
- **Clock & Reset**
  - Built-in factory-trimmed 24MHz RC oscillator
  - Built-in 128KHz RC oscillator
  - High-speed external 4~25MHz oscillator
  - Power on/down reset, programmable voltage detector
- **7-channel general-purpose DMA controller**
  - 7 channels, support ring buffer
  - Support TIMx/ADC /USART/I2C/SPI
- **1 group of OPA and comparator: connected with ADC and TIM2**
- **1 group of 10-bit ADC**
  - Analog input range: 0~V_{DD}
  - 8 external signals + 2 internal signals
  - Support external delayed triggering
- **Multiple timers**
  - 16-bit advanced-control timer, with dead zone control and emergency brake; can offer PWM complementary output for motor control
  - 16-bit general-purpose timer, provide input capture/output comparison/PWM/pulse counting/incremental encoder input
  - 2 watchdog timers (independent watchdog and window watchdog)
  - SysTick: 32-bit counter
- **Communication interfaces**
  - USART interface
  - I2C interface
  - SPI interface
- **GPIO port**
  - 3 groups of GPIO ports, 18 I/O ports
  - Mapping 1 external interrupt
- **Security features: 96-bit unique ID**
- **Debug mode: 1-wire serial debug interface (SDI)**
- **Package: SOP, TSSOP or QFN**

Model	Flash memory	SRAM	Pin No.	General-purpose I/O	Advanced-control timer	General-purpose timer	Watchdog	System clock source	ADC Channel No.	SPI	I2C	USART	Package Form
CH32V003F4P6	16K	2K	20	18	1	1	2	3	8	1	1	1	TSSOP20
CH32V003F4U6													QFN20
CH32V003A4M6	16K	2K	16	14	1	1	2	3	6	-	1	1	SOP16
CH32V003J4M6	16K	2K	8	6	1	1	2	3	6		1	1	SOP8

Chapter 1 Specification

1.1 System Architecture

The microcontroller is based on the RISC-V instruction set of QingKe V2A design, and its architecture includes the core, arbitration unit, DMA module, SRAM storage and other parts of the interaction through multiple groups of buses. The design integrates a general-purpose DMA controller to reduce CPU load and improve access efficiency, and also has data protection mechanisms and automatic clock switching protection to increase system stability. The following diagram shows the overall architecture of the product.

Figure 1-1 System block diagram

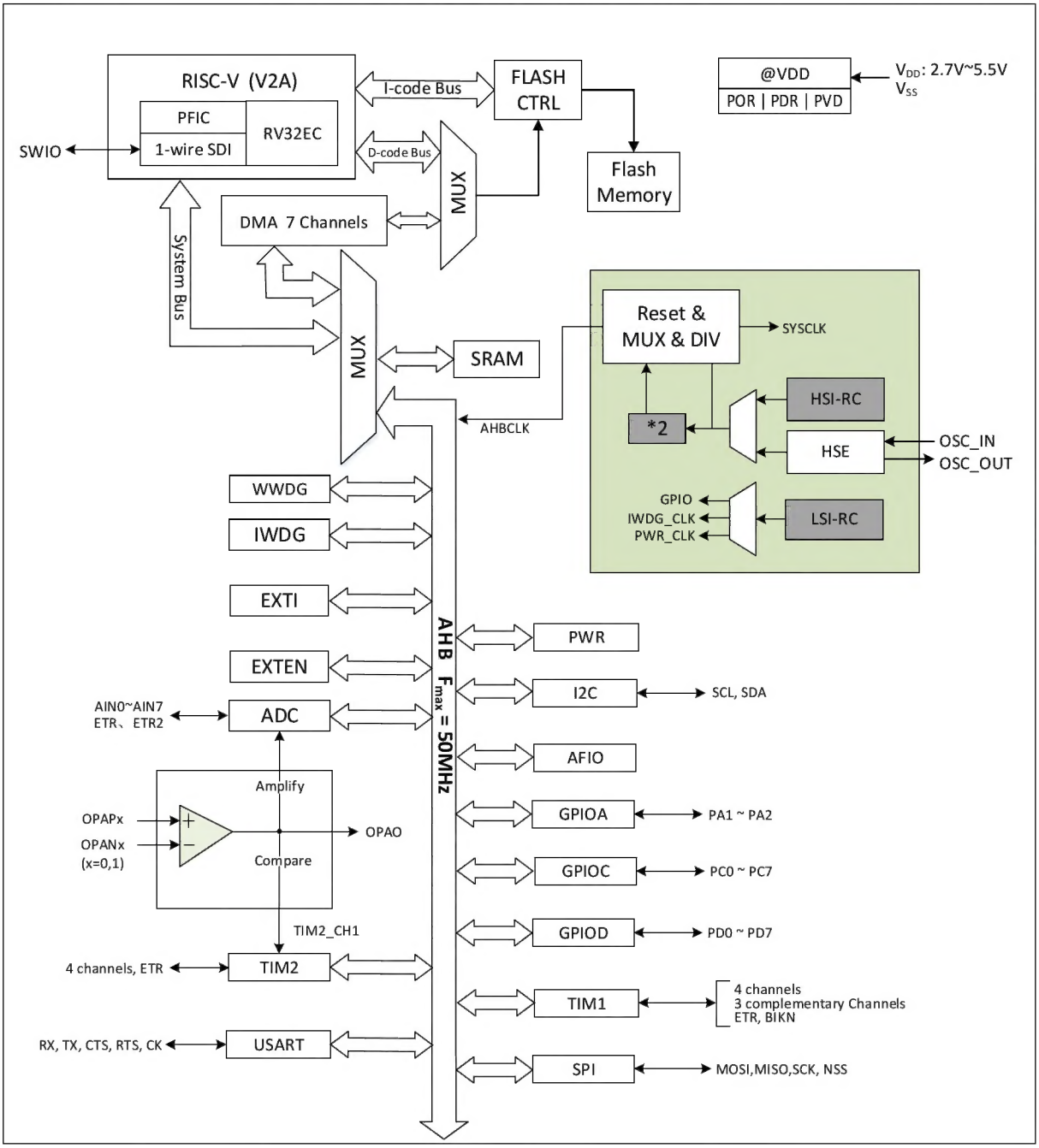

1.2 Memory Map

Figure 1-2 Memory address map

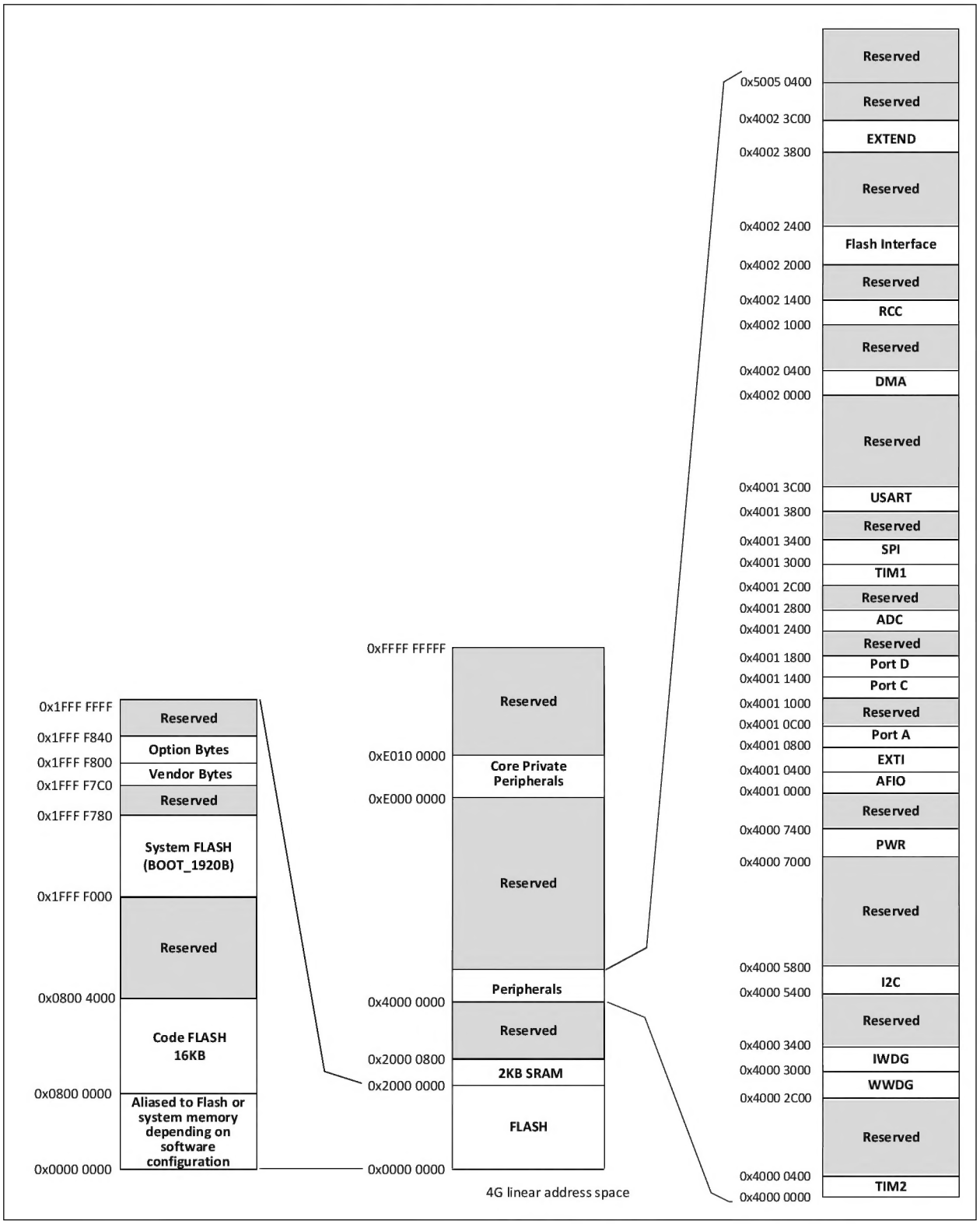

1.3 Clock Tree

Three groups of clock sources are introduced into the system: internal high-frequency RC oscillator (HSI), internal low-frequency RC oscillator (LSI), external high-frequency oscillator (HSE), and external low-frequency oscillator (LSE). Among them, the low-frequency clock source provides the clock reference for RTC and independent watchdog. The high-frequency clock source is directly or indirectly output as system clock (SYSCLK) via 2X frequency. The system clock is then provided by each prescaler to provide the AHB domain in peripheral control clock and sampling or output clock. Some modules need to be directly provided by the PLL clock.

Figure 1-3 Clock tree block diagram

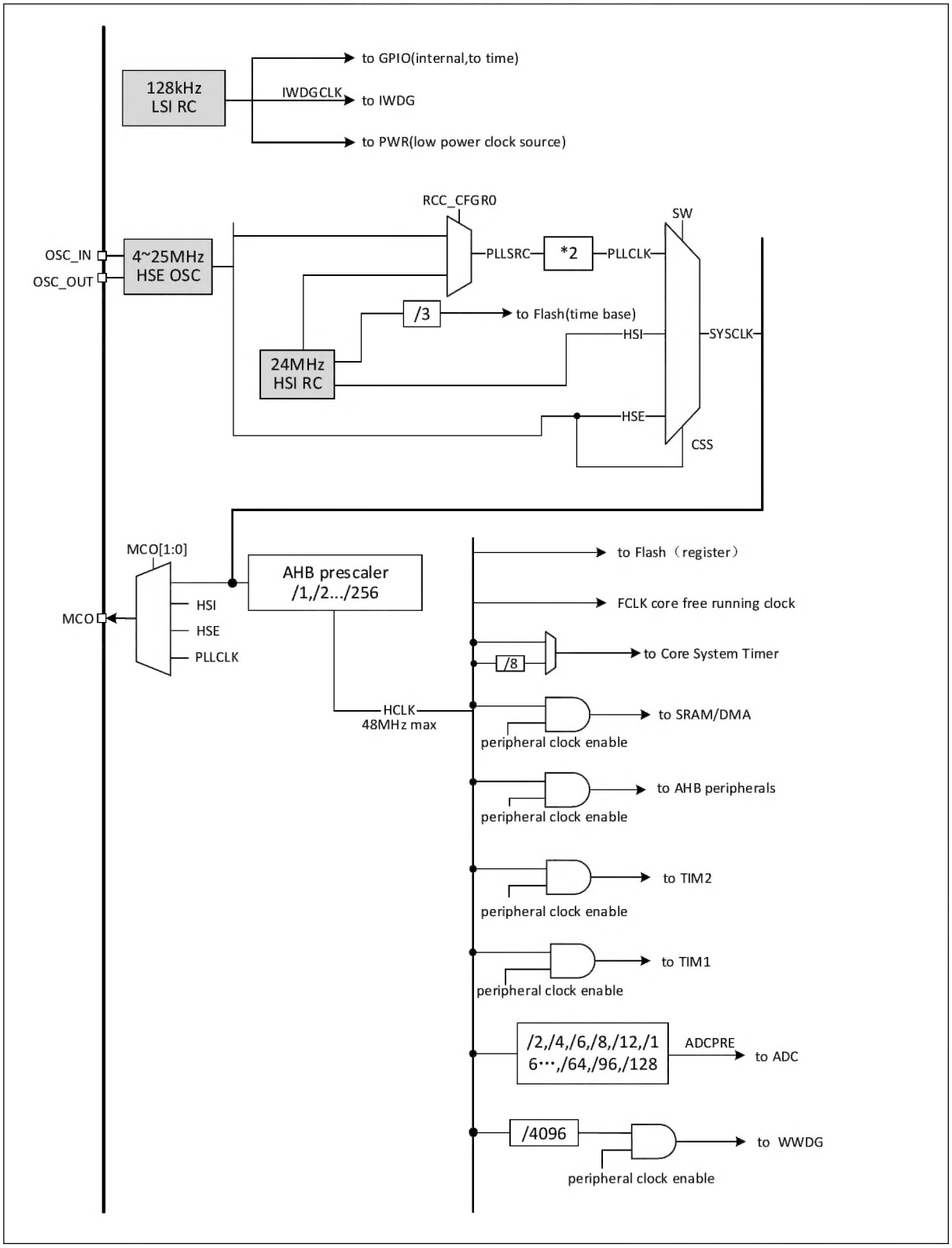

1.4 Functional Description

1.4.1 RISC-V2A Processor

The RISC-V2A supports the EC subset of the RISC-V instruction set. The processor is managed internally in a modular fashion and contains units such as a fast programmable interrupt controller (PFIC), extended instruction support, and more. The bus is connected to an external unit module to enable interaction between the external function module and the core. RV32EC instruction set, small-end data mode.

The processor with its minimal instruction set, multiple operating modes, and modular custom expansion can be flexibly applied to different scenarios of microcontroller design, such as small area low-power embedded scenarios.

- Support machine mode
- Fast Programmable Interrupt Controller (PFIC)
- 2-level hardware interrupt stack
- 1-wire serial debug interface (SDI)
- Custom extended commands

1.4.2 On-chip Memory and Boot Mode

Built-in 2K bytes SRAM area for data storage, data loss after power down.

Built-in 16K bytes of program flash memory storage (Code FLASH) for user applications and constant data storage.

Built-in 1920 bytes of system storage (System FLASH) for system bootloader storage (factory-cured bootloader)

64 bytes are used for the system non-volatile configuration information storage area and 64 bytes are used for the user select word storage area.

Support Boot and user code jumping to each other.

1.4.3 Power Supply Scheme

V_{DD} = 2.7~5.5V: Power supply for some I/O pins and internal voltage regulator (V_{DD} performance gradually deteriorates if less than 2.9V when using ADC).

1.4.4 Power Supply Monitor

This product integrates a power-on reset (POR)/power-down reset (PDR) circuit, which is always in working condition to ensure that the system is in supply. It works when the power exceeds 2.7V; when V_{DD} is lower than the set threshold ($V_{POR/PDR}$), the device is placed in the reset state without using an external reset circuit.

In addition, the system is equipped with a programmable voltage monitor (PVD), which needs to be turned on by software to compare the voltage of V_{DD} power supply with the set threshold V_{PVD}.Turn on the corresponding edge interrupt of PVD, and you can receive interrupt notification when V_{DD} drops to the PVD threshold or rises to the PVD threshold. Refer to Chapter 4 for the values of $V_{POR/PDR}$ and V_{PVD}.

1.4.5 Voltage Regulator

After reset, the regulator is automatically turned on, and there are 3 operation modes according to the application mode.

- ON mode: Normal operation, providing stable core power.
- Low-power mode: When the CPU enters Stop mode, system automatically enters Standby mode.

1.4.6 Low-power Mode

The system supports 2 low-power modes, which can be selected for low-power consumption, short start-up time and multiple wake-up events to achieve the best balance.

- Sleep mode

In Sleep mode, only the CPU clock is stopped, but all peripheral clocks are powered normally and the peripherals are in a working state. This mode is the shallowest low-power mode, but it is the fastest mode to wake up the system.
Exit condition: any interrupt or wake-up event.

- Standby mode

The PDDS and SLEEPDEEP bits are set, and the WFI/WFE instruction is executed to enter. The power supply of the kernel part is turned off, and the RC oscillator of HSI and the HSE crystal oscillator are also turned off, and the lowest power consumption can be achieved in this mode.
Exit conditions: any external interrupt/event (EXTI signal), external reset signal on NRST, IWDG reset, where EXTI signal includes one of 18 external I/O ports, output of PVD, AWU auto-wakeup.

1.4.7 Fast Programmable Interrupt Controller (PFIC)

The product's built-in Fast Programmable Interrupt Controller (PFIC) supports up to 255 interrupt vectors, providing flexible interrupt management capabilities with minimal interrupt latency. The current product manages 4 core private interrupts and 23 peripheral interrupt management, with other interrupt sources reserved. the registers of PFIC are all accessible in machine privileged mode.

- 2 individually maskable interrupts
- Provide a non-maskable interrupt NMI
- Hardware interrupt stack (HPE) support without instruction overhead
- Provide 2-way meter-free interrupt (VTF)
- Vector table supports address or command mode
- Support 2-level interrupt nesting
- Support break tail link function

1.4.8 External Interrupt/Event Controller (EXTI)

The external interrupt/event controller contains a total of 8 edge detectors for generating interrupt/event requests. Each interrupt line can be independently configured with its trigger event (rising or falling edge or double edge) and can be individually masked; the pending register maintains the status of all interrupt requests. EXTI can detect clock cycles with pulse widths less than the internal AHB. 18 general purpose I/O ports are optionally connected to the same external interrupt source.

1.4.9 General-purpose DMA Controller

The system has built-in 1 group of general-purpose DMA controllers, manages 8 channels in total, and flexibly handles high-speed data transmission from memory to memory, peripherals to memory, and memory to peripherals, and supports ring buffer mode. Each channel has a dedicated hardware DMA request logic to support one or more peripherals' access requests to the memory. The access priority, transfer length, source address and destination address of the transfer can be configured.

The main peripherals used by DMA include: general-purpose/advanced-control/basic timers TIMx, DAC,

USART, I2C and SPI.

Note: DMA and CPU access the system SRAM after arbitration by the arbiter.

1.4.10 Clock and Boot

The system clock source HSI is turned on by default. After the clock is not configured or reset, the internal 24MHz RC oscillator is used as the default CPU clock, and then an external 4~25MHz clock or PLL clock can be additionally selected. When the clock security mode is turned on, if the HSE is used as the system clock (directly or indirectly), the system clock will automatically switch to the internal RC oscillator when the external clock is detected to be invalid, and the HSE and PLL will be automatically turned off at the same time; in low-power consumption mode, the system will automatically switch to the internal RC oscillator after waking up. If the clock interrupt is enabled, the software can receive the corresponding interrupt.

1.4.11 Analog-to-digital Converter (ADC)

The product has built-in a 10-bit analog/digital converter (ADC) that shares up to eight external channels and two internal channel samples, with programmable channel sampling times for single, continuous, sweep or intermittent conversion. Provides analog watchdog function allows very accurate monitoring of one or more selected channels for monitoring channel signal voltages. Supports external event-triggered transitions with trigger sources including internal signals from the on-chip timer and external pins. Support for using DMA operation. Supports external trigger delay function. When this function is enabled, the controller delays the trigger signal according to the configured delay time when an external trigger edge is generated, and the ADC conversion is triggered as soon as the delay time is reached.

1.4.12 Timer and Watchdog

The timers in the system include an advanced-control timer, a general-purpose timer, two watchdog timers and system time base timer.

- Advanced-control timer

The advanced-control timer is a 16-bit auto-loading up/down counter with a 16-bit programmable prescaler. In addition to the complete general-purpose timer function, it can be regarded as a three-phase PWM generator distributed to 6 channels, with a complementary PWM output function with dead zone insertion, allowing the timer to be updated after a specified number of counter cycles to repeat counting cycle, braking function, etc. Many functions of the advanced-control timer are the same as the general timer, and the internal structure is also the same. Therefore, the advanced-control timer can cooperate with other TIM timers through the timer link function to provide synchronization or event link functions.

- General-purpose timer

The general-purpose timer is a 16-bit or 32-bit auto-loading up/down counter with a programmable 16-bit prescaler and 4 independent channels. Each channel supports input capture, output comparison, and PWM generation and single pulse mode output. It can also work with advanced-control timers through the timer link function to provide synchronization or event link functions. In Debug mode, the counter can be frozen while the PWM outputs are disabled, thereby cutting off the switches controlled by these outputs. Any general-purpose timer can be used to generate PWM output. Each timer has an independent DMA request mechanism. These timers can also process signals from incremental encoders, as well as digital outputs from 1 to 3 Hall sensors.

- Independent watchdog

The independent watchdog is a configurable 12-bit down counter that supports 7 frequency division factors. The clock is provided by an internal independent 128 KHz RC oscillator (LSI); because the LSI is independent of the main clock, it can run in Stop and Standby modes. IWDG is outside the main program and can work completely independently. Therefore, it is used to reset the entire system when a problem occurs, or as a free timer to provide timeout management for the application. It can be configured as software or hardware to start the watchdog through the option byte. In Debug mode, the counter can be frozen.

- Window Watchdog

The window watchdog is a 7-bit down counter and can be set to free-running. It can be used to reset the entire system when a problem occurs. It is driven by the main clock and has an early warning interrupt function; in Debug mode, the counter can be frozen.

- SysTick Timer

QingKe microprocessor core comes with a 32-bit incremental counter for generating SYSTICK exceptions (exception number: 15), which can be used exclusively in real-time operating systems to provide a "heartbeat" rhythm for the system, or as a standard 32-bit counter. It has an automatic reload function and a programmable clock source.

1.4.13 Communication Interface

1.4.13.1 Universal Synchronous/Asynchronous Receiver Transmitter (USART)

The product provides 1 group of Universal Synchronous/Asynchronous Receiver Transmitters (USART). It supports full-duplex asynchronous communication, synchronous one-way communication and half-duplex single-wire communication. It also supports LIN (Local Interconnect Network), compatible with ISO7816 smart card protocol and IrDA SIR ENDEC transmission codec specification, and modem (CTS/RTS hardware flow control) operation. It also allows multi-processor communication. It uses a fractional baud rate generator system and supports DMA operation continuous communication.

1.4.13.2 Serial Peripheral Interface (SPI)

1 serial peripherals interface (SPI) provide master or slave operation, dynamic switching. Support multi-master mode, full-duplex or half-duplex synchronous transmission, support basic SD card and MMC mode. Programmable clock polarity and phase, data bit width provides 8 or 16-bit selection, hardware CRC generation/check for reliable communication, and continuous communication support for DMA operation.

1.4.14.3 I2C Bus

1 I2C bus interface, able to work in multi-master mode or slave mode, complete with all I2C bus specific timing, protocols, arbitration, etc., supporting both standard and fast communication speeds.

The I2C interface provides 7-bit or 10-bit addressing and supports dual slave address addressing in 7-bit slave mode. A hardware CRC generator/checker is built-in.

1.4.14 General-purpose Input and Output (GPIO)

The system provides 3 groups of GPIO ports with a total of 18 GPIO pins. Each pin can be configured by software as output (push-pull or open-drain), input (with or without pull-up or pull-down) or multiplexed peripheral function port. Most GPIO pins are shared with digital or analog multiplexed peripherals. Except for ports with analog input functions, all GPIO pins have high current passing capabilities. A locking mechanism is provided to freeze the I/O configuration to avoid accidental writing to the I/O register.

The I/O pins in the system is provided by V_{DD}. Changing the V_{DD} power supply will change the high value of the I/O pin output level to adapt to the external communication interface level. Please refer to the pin description for specific pins.

1.4.15 Operational Amplifier/Comparator (OPA)

The product has a built-in set of op-amps/comparators, with internal selection associated to the ADC and TIM2 (CH1) peripherals, whose inputs and outputs can be selected by changing the configuration for multiple channels. Support for external analog small signals are amplified and fed into the ADC to achieve small signal ADC conversion, can also complete the signal comparator function, the comparison results from the GPIO output or directly into the TIMx input channel.

1.4.16 1-wire Serial Debug Interface (SDI)

The core comes with a 1-wire serial debug interface, SWIO pin (Single Wire Input Output). The default debug interface pin function is turned on after system power on or reset. The HSI clock must be turned on when using the 1-wire emulation debug interface.

Chapter 2 Pinouts and Pin Definition

2.1 Pinouts

CH32V003F4P6

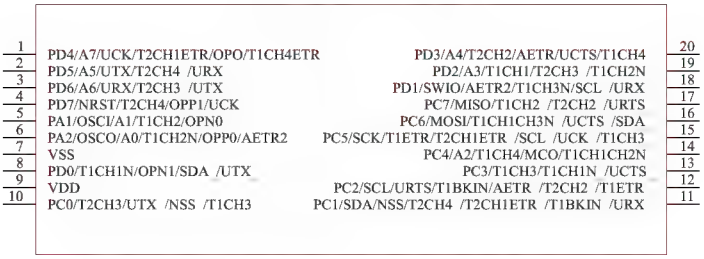

CH32V003F4U6

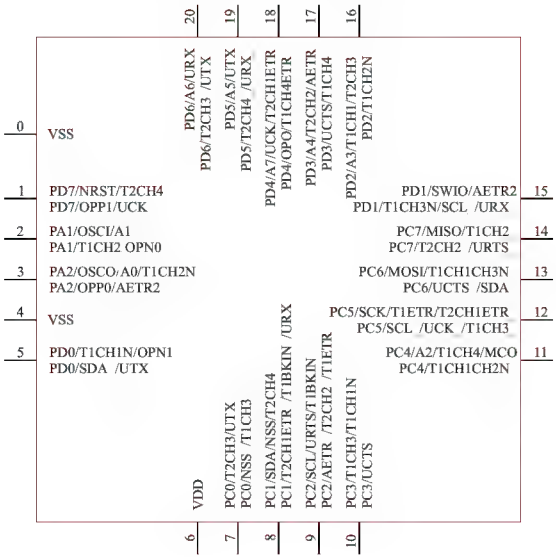

CH32V003A4M6

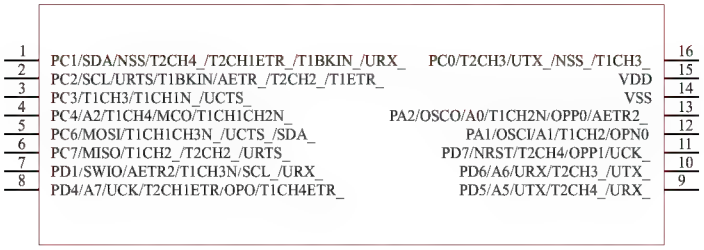

CH32V003J4M6

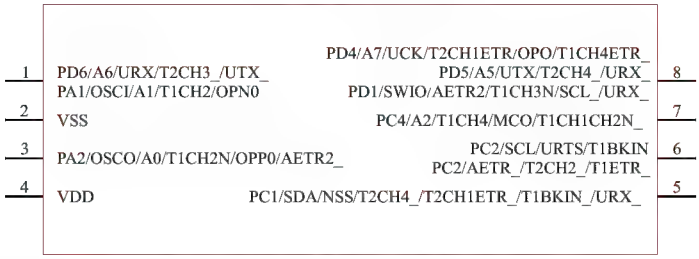

Note: The multiplexed functions in the pin diagram are abbreviated.

Example: A: ADC, A7 (ADC_IN7)

T: TIME, T2CH4 (TIM2_CH4)

U: USART, URX (USART_RX)

OP: OPA, OPO (OPA_OUT), OPP1 (OPA_P1)

OSCI (OSCIN)

OSCO (OSCOUT)

SDA (I2C_SDA)

SCL (I2C_SCL)

SCK (SPI_SCK)

NSS (SPI_NSS)

MOSI (SPI_MOSI)

MISO (SPI_MISO)

AETR(ADC_ETR)

2.2 Pin Description

Table 2-1 Pin definitions

Note: The pin function descriptions in the table below are for all functions and do not relate to specific model products. Peripheral resources may vary between models, so please check the availability of this function according to the product model resource table before viewing.

Pin No.				Pin name	Pin type	Main function (after reset)	Default alternate function	Remapping function
SOP16	TSSOP20	QFN20	SOP8					
-	-	0	-	VSS	P	VSS	-	-
8	1	18	8	PD4	I/O/A	PD4	UCK/T2CH1ETR(1)/A7/OPO	TIETR_2/T1CH4_3
9	2	19	8	PD5	I/O/A	PD5	UTX/A5	T2CH4_3/URX_2
10	3	20	1	PD6	I/O/A	PD6	URX/A6	T2CH3_3/UTX_2
11	4	1	-	PD7	I/O/A	PD7	NRST/T2CH4/OPP1	UCK_1/UCK_2/T2CH4_2
12	5	2	1	PA1	I/O/A	PA1	T1CH2/A1/OPN0	OSCI/T1CH2_2
13	6	3	3	PA2	I/O/A	PA2	T1CH2N/A0/OPP0	OSCO/AETR2_1/T1CH2N_2
14	7	4	2	VSS	P	VSS	-	-
-	8	5	-	PD0	I/O/A	PD0	T1CH1N/OPN1	SDA_1/UTX_1/T1CH1N_2
15	9	6	4	VDD	P	VDD	-	-

16	10	7	-	PC0	I/O	PC0	T2CH3	NSS_1/UTX_3/T2CH3_2 /T1CH3_1
1	11	8	5	PC1	I/O/FT	PC1	SDA/NSS	T1BKIN_1/T2CH4_1 T2CH1ETR(1)_2/URX_3 /T2CH1ETR(1)_3/T1BKIN_3
2	12	9	6	PC2	I/O/FT	PC2	SCL/URTS/T1BKIN	AETR_1/T2CH2_1 /T1ETR_3/URTS_1 /T1BKIN_2
3	13	10	-	PC3	I/O	PC3	T1CH3	T1CH1N_1/UCTS_1 /T1CH3_2/T1CH1N_3
4	14	11	7	PC4	I/O/A	PC4	T1CH4/MCO/A2	T1CH2N_1/T1CH4_2 /T1CH1_3
-	15	12	-	PC5	I/O/FT	PC5	SCK/T1ETR	T2CH1ETR(1)_1/SCL_2 /SCL_3/UCK_3/T1ETR_1 /T1CH3_3/SCK_1
5	16	13	-	PC6	I/O/FT	PC6	MOSI	T1CH1_1/UCTS_2/SDA_2 /SDA_3/UCTS_3/T1CH3N_3 /MOSI_1
6	17	14	-	PC7	I/O	PC7	MISO	T1CH2_1/URTS_2 /T2CH2_3/URTS_3 /T1CH2_3/MISO_1
7	18	15	8	PD1	I/O/A	PD1	SWIO/T1CH3N/AETR2	SCL_1/URX_1/T1CH3N_1 /T1CH3N_2
-	19	16	-	PD2	I/O/A	PD2	T1CH1/A3	T2CH3_1/T1CH2N_3 /T1CH1_2
-	20	17	-	PD3	I/O/A	PD3	A4/T2CH2/AETR/UCTS	T2CH2_2/T1CH4_1

Note: 1. TIM2_CH1, TIM2_ETR;

2. The value after the underline of the remapping function indicates the configuration value of the corresponding bit in the AFIO register. For example: T1CH4_3 indicates that the corresponding bit of the AFIO register is configured as 11b;

3. Explanation of table abbreviations:

I = TTL/CMOS level Schmitt input.

O = CMOS level tri-state output.

P = power supply.

FT = 5V tolerant.

A = Analog signal input or output.

2.3 Pin Alternate Functions

Note: The pin function descriptions in the table below are for all functions and do not relate to specific model products. Peripheral resources may vary between models, so please check the availability of this function according to the product model resource table before viewing.

Table 2-2 Pin alternate and remapping functions

Alternate / Pin	ADC	TIM1	TIM2	USART	SYS	I2C	SPI	SWIO	OPA
PA1	A1	T1CH2/T1CH2_2			OSCI				OPN0
PA2	A0/AETR2_1	T1CH2N/T1CH2N_2			OSCO				OPP0
PC0		T1CH3_1	T2CH3/T2CH3_2	UTX_3			NSS_1		
PC1		T1BKIN_1/T1BKIN_3	T2CH4_1/T2CH1ETR(1)_2 /T2CH1ETR(1)_3	URX_3		SDA	NSS		
PC2	AETR_1	T1BKIN/T1ETR_3 /T1BKIN_2	T2CH2_1	URTS/URTS_1		SCL			
PC3		T1CH3/T1CH1N_1 T1CH3_2/T1CH1N_3		UCTS_1					
PC4	A2	T1CH4/T1CH2N_1 /T1CH4_2/T1CH1_3			MCO				
PC5		T1ETR/T1CH3_3 /T1ETR_1	T2CH1ETR(1)_1	UCK_3		SCL_2/SCL_3	SCK/SCK_1		
PC6		T1CH1_1/T1CH3N_3		UCTS_2/UCTS_3		SDA_2/SDA_3	MOSI/MOSI_1		
PC7		T1CH2_1/T1CH2_3	T2CH2_3	URTS_2/URTS_3			MISO/MISO_1		
PD0		T1CH1N/T1CH1N_2		UTX_1		SDA_1			OPN1
PD1	AETR2	T1CH3N/T1CH3N_1 /T1CH3N_2		URX_1		SCL_1		SWIO	
PD2	A3	T1CH1/T1CH2N_3 /T1CH1_2	T2CH3_1						
PD3	A4/AETR	T1CH4_1	T2CH2/T2CH2_2	UCTS					
PD4	A7	T1ETR_2/T1CH4_3	T2CH1ETR(1)	UCK					OPO
PD5	A5		T2CH4_3	UTX/URX_2					
PD6	A6		T2CH3_3	URX/UTX_2					
PD7			T2CH4/T2CH4_2	UCK_1/UCK_2	NRST				OPP1

Note: TIM2_CH1、TIM2_ETR.

Chapter 3 Electrical Characteristics

3.1 Test Conditions

Unless otherwise specified and marked, all voltages are referenced to V_{SS}.

All minimum and maximum values are guaranteed in the worst conditions of ambient temperature, supply voltage and clock frequency. Typical values are based on normal temperature (25°C) and V_{DD} = 3.3V or 5V environment, which are given only as design guidelines.

The data based on comprehensive evaluation, design simulation or technology characteristics are not tested in production. On the basis of comprehensive evaluation, the minimum and maximum values refer to sample tests. Unless otherwise specified that is tested, the characteristic parameters are guaranteed by comprehensive evaluation or design.

Power supply scheme:

Figure 3-1 Typical circuit for conventional power supply

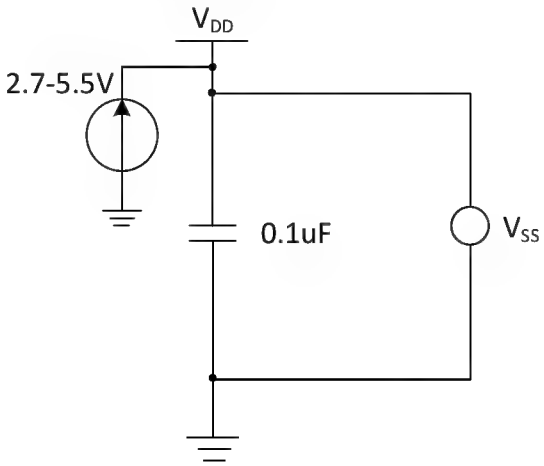

3.2 Absolute Maximum Ratings

Stresses at or above the absolute maximum ratings listed in the table below may cause permanent damage to the device.

Table 3-1 Absolute maximum ratings

Symbol	Description	Min.	Max.	Unit
T_A	Ambient temperature during operation	-40	85	°C
T_S	Ambient temperature during storage	-40	125	°C
V_{DD}-V_{SS}	External main supply voltage (V_{DD})	-0.3	5.5	V
V_{IN}	Input voltage on the FT (5V tolerant) pin	V_{SS}-0.3	5.5	V
	Input voltage on other pins	V_{SS}-0.3	V_{DD}+0.3	
$\lvert\triangle V_{DD_x}\rvert$	Variations between different main power supply pins		50	mV
$\lvert\triangle V_{SS_x}\rvert$	Variations between different ground pins		50	mV

$V_{ESD(HBM)}$	Electrostatic discharge voltage (human body model, non-contact)	4K		V
I_{VDD}	Total current into V_{DD} power lines (supply current)		100	mA
I_{Vs}	Total current out of V_{SS} ground lines (outflow current)		80	
$I_{I/O}$	Sink current on any I/O and control pin		20	
	Output current on any I/O and control pin		-20	
$I_{INJ(PIN)}$	OSC_IN pin of HSE		+/-4	
	Injected current on other pins		+/-4	
$\sum I_{INJ(PIN)}$	Total injected current on all I/Os and control pins		+/-20	

3.3 Electrical Characteristics

3.3.1 Operating Conditions

Table 3-2 General operating conditions

Symbol	Parameter	Condition	Min.	Max.	Unit
F_{HCLK}	Internal AHB clock frequency			50	MHz
V_{DD}	Standard operating voltage	ADC not used	2.7	5.5	V
		Use ADC (recommended)	2.8	5.5	
T_A	Ambient temperature		-40	85	°C
T_J	Junction temperature range		-40	105	°C

Table 3-3 Power-on and power-down conditions

Symbol	Parameter	Condition	Min.	Max.	Unit
t_{VDD}	V_{DD} rise time rate		0	∞	us/V
	V_{DD} fall time rate		20	∞	

3.3.2 Built-in Reset and Power Control Block Characteristics

Table 3-4 Reset and voltage monitor (For PDR, select high threshold gear)

Symbol	Parameter	Condition	Min.	Typ.	Max.	Unit
V_{PVD}(1)	Programmable voltage detector level selection	PLS[2:0] = 000 (rising edge)		2.85		V
		PLS[2:0] = 000 (falling edge)		2.7		V
		PLS[2:0] = 001 (rising edge)		3.05		V
		PLS[2:0] = 001 (falling edge)		2.9		V
		PLS[2:0] = 010 (rising edge)		3.3		V
		PLS[2:0] = 010 (falling edge)		3.15		V
		PLS[2:0] = 011 (rising edge)		3.5		V
		PLS[2:0] = 011 (falling edge)		3.3		V
		PLS[2:0] = 100 (rising edge)		3.7		V
		PLS[2:0] = 100 (falling edge)		3.5		V
		PLS[2:0] = 101 (rising edge)		3.9		V
		PLS[2:0] = 101 (falling edge)		3.7		V
		PLS[2:0] = 110 (rising edge)		4.1		V

		PLS[2:0] = 110 (falling edge)		3.9		V
		PLS[2:0] = 111 (rising edge)		4.4		V
		PLS[2:0] = 111 (falling edge)		4.2		V
$V_{PVDhyst}$	PVD hysteresis			0.18		V
$V_{POR/PDR}$	Power-on/power-down reset threshold	Rising edge	2.32	2.5	2.68	V
		Falling edge	2.3	2.48	2.66	V
$V_{PDRhyst}$	PDR hysteresis			20		mV
$t_{RSTTEMPO}$	Power on reset		1	1.5(2)	21	mS
	Other resets			300		uS

Note: 1. Normal temperature test value.

2. The user configuration bit RST_MODE can increase the power-on reset delay.

3.3.3 Embedded Reference Voltage

Table 3-5 Embedded reference voltage

Symbol	Parameter	Condition	Min.	Typ.	Max.	Unit
V_{REFINT}	Internal reference voltage	T_A = -40°C~85°C	1.17	1.2	1.23	V
$T_{S_vrefint}$	ADC sampling time when reading the internal reference voltage		3		500	$1/f_{ADC}$

3.3.4 Supply Current Characteristics

Current consumption is a comprehensive index of a variety of parameters and factors. These parameters and factors include operating voltage, ambient temperature, I/O pin load, the software configuration of the product, the operating frequency, flip rate of the I/O pin, the location of the program in memory and the executed code, etc. The current consumption measurement method is as follows:

Figure 3-2 Current consumption measurement

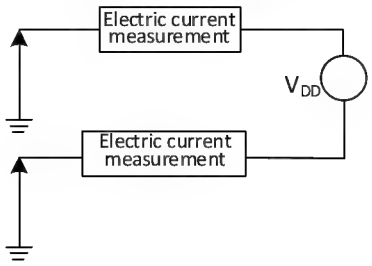

The microcontroller is in the following conditions:

Normal temperature VDD = 3.3V or 5V case, when testing: all IO ports configured with pull-down inputs; HSI on when testing HSE, HSE off when testing HSI, HSE= 24M, HSI= 24M (calibrated); system clock source CLK*2 when FHCLK= 48MHz, 16MHz; clock on all peripherals only when turning on all peripherals. Enables or disables power consumption of all peripheral clocks.

Table 3-6-1 Typical current consumption in Run mode, data processing code runs from the internal Flash (V_{DD} = 3.3V)

Symbol	Parameter	Condition		Typ. All peripherals enabled	Typ. All peripherals disabled	Unit
I_{DD}(1)	Supply current in Run mode	External clock	F_{HCLK} = 48MHz	7.4	5.2	mA
			F_{HCLK} = 24MHz	5.6	4.5	
			F_{HCLK} = 16MHz	4.7	3.9	
			F_{HCLK} = 8MHz	3.0	2.6	
			F_{HCLK} = 750KHz	1.7	1.7	
		Runs on the high-speed internal RC oscillator (HSI). Uses AHB prescaler to reduce the frequency.	F_{HCLK} = 48MHz	6.4	4.0	
			F_{HCLK} = 24MHz	4.6	3.5	
			F_{HCLK} = 16MHz	4.0	3.3	
			F_{HCLK} = 8MHz	2.4	2.0	
			F_{HCLK} = 750KHz	1.1	1.1	

Note: 1. The above are measured parameters.

2. When VDD < 3V, the current power consumption will increase.

Table 3-6-2 Typical current consumption in Run mode, data processing code runs from the internal Flash (V_{DD} = 5V)

Symbol	Parameter	Condition		Typ. All peripherals enabled	Typ. All peripherals disabled	Unit
I_{DD}(1)	Supply current in Run mode	External clock	F_{HCLK} = 48MHz	9.0	6.8	mA
			F_{HCLK} = 24MHz	7.1	6.0	
			F_{HCLK} = 16MHz	5.9	5.1	
			F_{HCLK} = 8MHz	3.7	3.3	
			F_{HCLK} = 750KHz	2.1	2.0	
		Runs on the high-speed internal RC oscillator (HSI). Uses AHB prescaler to reduce the frequency.	F_{HCLK} = 48MHz	7.4	5.1	
			F_{HCLK} = 24MHz	5.7	4.6	
			F_{HCLK} = 16MHz	5.2	4.4	
			F_{HCLK} = 8MHz	3.2	2.8	
			F_{HCLK} = 750KHz	1.5	1.4	

Note: 1. The above are measured parameters.

Table 3-7-1 Typical current consumption in Sleep mode, data processing code runs from internal Flash or SRAM (V_{DD} = 3.3V)

Symbol	Parameter	Condition		Typ. All peripherals enabled	Typ. All peripherals disabled	Unit
I_{DD}(1)	Supply	External clock	F_{HCLK} = 48MHz	4.7	2.4	mA

	current in Sleep mode (In this case, peripheral power supply and clock are maintained)		F_{HCLK} = 24MHz	2.8	1.7	
			F_{HCLK} = 16MHz	2.5	1.7	
			F_{HCLK} = 8MHz	1.7	1.3	
			F_{HCLK} = 750KHz	1.2	1.1	
		Runs on the high-speed internal RC oscillator (HSI). Uses AHB prescaler to reduce the frequency.	F_{HCLK} = 48MHz	4.1	1.7	
			F_{HCLK} = 24MHz	2.1	1.0	
			F_{HCLK} = 16MHz	1.8	1.0	
			F_{HCLK} = 8MHz	1.0	0.6	
			F_{HCLK} = 750KHz	0.5	0.4	

Note: 1. The above are measured parameters.

Table 3-7-2 Typical current consumption in Sleep mode, data processing code runs from internal Flash or SRAM (V_{DD} = 5V)

Symbol	Parameter	Condition		Typ.		Unit
				All peripherals enabled	All peripherals disabled	
I_{DD}(1)	Supply current in Sleep mode (In this case, peripheral power supply and clock are maintained)	External clock	F_{HCLK} = 48MHz	4.7	2.4	mA
			F_{HCLK} = 24MHz	2.8	1.7	
			F_{HCLK} = 16MHz	2.5	1.7	
			F_{HCLK} = 8MHz	1.7	1.3	
			F_{HCLK} = 750KHz	1.2	1.1	
		Runs on the high-speed internal RC oscillator (HSI). Uses AHB prescaler to reduce the frequency.	F_{HCLK} = 48MHz	4.1	1.7	
			F_{HCLK} = 24MHz	2.1	1.0	
			F_{HCLK} = 16MHz	1.8	1.0	
			F_{HCLK} = 8MHz	0.1	0.6	
			F_{HCLK} = 750KHz	0.5	0.4	

Note: 1. The above are measured parameters.

Table 3-8 Typical current consumption in Standby mode

Symbol	Parameter	Condition		Typ.	Unit
I_{DD}	Supply current in Standby mode	LSI on	V_{DD} = 3.3V	9.1	uA
			V_{DD} = 5V	9.4	
		LSI off	V_{DD} = 3.3V	7.6	
			V_{DD} = 5V	8.0	

Note: 1. The above are measured parameters.

2. The test conditions are: at room temperature VDD = 3.3V or 5V, test the initial master frequency HSI = 24M, all IO ports are configured with pull-down inputs.

3.3.5 External Clock Source Characteristics

Table 3-9 From external high-speed clock

Symbol	Parameter	Condition	Min.	Typ.	Max.	Unit

F_{HSE_ext}	External clock frequency		4	24	25	MHz
V_{HSEH}(1)	OSC_IN input pin high level voltage		$0.8V_{DD}$		V_{DD}	V
V_{HSEL}(1)	OSC_IN input pin low-level voltage		0		$0.2V_{DD}$	V
$C_{in(HSE)}$	OSC_IN input capacitance			5		pF
$DuCy_{(HSE)}$	Duty cycle		40	50	60	%
I_L	OSC_IN input leakage current				±1	uA

Note: 1. Failure to meet this condition may cause level recognition error.

Figure 3-3 External high-frequency clock source circuit

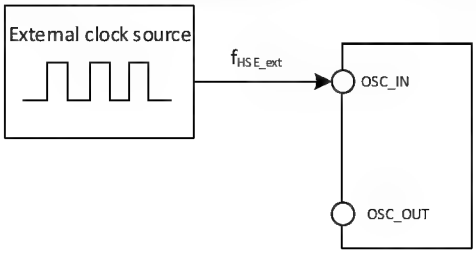

Table 3-10 High-speed external clock generated from a crystal/ceramic resonator

Symbol	Parameter	Condition	Min.	Typ.	Max.	Unit
F_{OSC_IN}	Resonator frequency		4	24	25	MHz
R_F	Feedback resistance			250		kΩ
C	Recommended load capacitance and corresponding crystal series impedance R_S	$R_S = 60\Omega$(1)		20		pF
I_2	HSE drive current	$V_{DD} = 3.3V$, 20p load		0.32		mA
g_m	Oscillator transconductance	Startup		6.8		mA/V
$t_{SU(HSE)}$	Startup time	V_{DD} is stable, 24M crystal		2		ms

Note 1: It is recommended that the ESR of 25M crystal should not exceed 60 Ω, and it can be relaxed if it is lower than 25M.

Circuit reference design and requirements:

The load capacitance of the crystal is subject to the recommendation of the crystal manufacturer, generally $C_{L1} = C_{L2}$.

Figure 3-4 Typical circuit of external 24M crystal

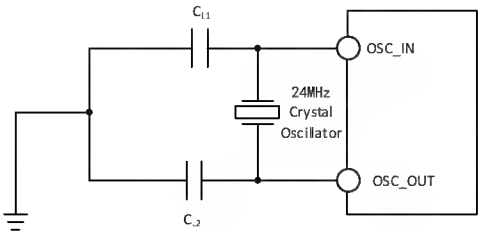

3.3.6 Internal Clock Source Characteristics

Table 3-11 Internal high-speed (HSI) RC oscillator characteristics

Symbol	Parameter	Condition	Min.	Typ.	Max.	Unit
F_{HSI}	Frequency (after calibration)			24		MHz
$DuCy_{HSI}$	Duty cycle		45	50	55	%
ACC_{HSI}	Accuracy of HSI oscillator (after calibration)	TA = 0°C～70°C	-1.2		1.6	%
		TA = -40°C～85°C	-2.2		2.2	%
$t_{SU(HSI)}$	HSI oscillator startup stabilization time			10		us
$I_{DD(HSI)}$	HSI oscillator power consumption		120	180	270	uA

Table 3-12 Internal low-speed (LSI) RC oscillator characteristics

Symbol	Parameter	Condition	Min.	Typ.	Max.	Unit
F_{LSI}	Frequency		100	128	150	KHz
$DuCy_{LSI}$	Duty cycle		45	50	55	%
$t_{SU(LSI)}$	LSI oscillator startup stabilization time			80		us
$I_{DD(LSI)}$	LSI oscillator power consumption			1.5		uA

3.3.7 Wakeup Time from Low-power Mode

Table 3-13 Wakeup time from low-power mode(1)

Symbol	Parameter	Condition	Typ.	Unit
$t_{wusleep}$	Wakeup from Sleep mode	Wake up using HSI RC clock	30	us
$t_{WUSTDBY}$	Wakeup from Standby mode	LDO stabilization time + HSI RC clock wake up + code load time(2) (take 128K as example)	200	us

Note: The above parameters are measured parameters.

3.3.8 Memory Characteristics

Table 3-14 Flash memory characteristics

Symbol	Parameter	Condition	Min.	Typ.	Max.	Unit
t_{ERASE_64}	Page (64 bytes) programming time	T_A = -20°C~85°C	2.4		3.1	ms
t_{ERASE}	Page (64 bytes) erase time	T_A = -20°C~85°C	2.4		3.1	ms
t_{prog}	16-bit programming time	T_A = -20°C~85°C	2.4		3.1	ms
t_{ME}	Whole chip erase time	T_A = -20°C~85°C	2.4		3.1	ms
V_{prog}	Programming voltage		2.8		5.5	V

Table 3-15 Flash memory endurance and data retention

Symbol	Parameter	Condition	Min.	Typ.	Max.	Unit
N_{END}	Endurance	T_A = 25°C	10K	80K(1)		times
t_{RET}	Data retention		10			year

Note: The endurance parameter is actual measured, which is not guaranteed.

3.3.9 I/O Port Characteristics

Table 3-16 General-purpose I/O static characteristics

Symbol	Parameter	Condition	Min.	Typ.	Max.	Unit
V_{IH}	Standard I/O pin, input high level voltage		0.22*(V_{DD}-2.7)+1.55		V_{DD}+0.3	V
	FT I/O pin, input high level voltage		0.22*(V_{DD}-2.7)+1.55		5.5	V
V_{IL}	Standard I/O pin, input low-level voltage		-0.3		0.19*(V_{DD}-2.7)+0.65	V
	FT I/O pin, input low-level voltage		-0.3		0.19*(V_{DD}-2.7)+0.65	V
V_{hys}	Schmitt trigger voltage hysteresis		150			mV
I_{lkg}	Input leakage current	Standard I/O port			1	uA
		FT I/O port			3	
R_{PU}	Weak pull-up equivalent resistance		35	45	55	kΩ
R_{PD}	Weak pull-down equivalent resistance		35	45	55	kΩ
$C_{I/O}$	I/O pin capacitance			5		pF

Output drive current characteristics

GPIO (General-Purpose Input/Output Port) can sink or output up to ±8mA current, and sink or output ±20mA current (not strictly to V_{OL}/V_{OH}). In user applications, the total driving current of all I/O pins cannot exceed the absolute maximum ratings given in Section 3.2:

Table 3-17 Output voltage characteristics

Symbol	Parameter	Condition	Min.	Max.	Unit
V_{OL}	Output low level when 8 pins are sunk	TTL port, $I_{I/O}$ = +8mA		0.4	V
V_{OH}	Output high level when 8 pins are sourced	2.7V< V_{DD} <5.5V	V_{DD}-0.4		
V_{OL}	Output low level when 8 pins are sunk	CMOS port, $I_{I/O}$ = +8mA		0.4	V
V_{OH}	Output high level when 8 pins are sourced	2.7V< V_{DD} <5.5V	2.3		
V_{OL}	Output low level when 8 pins are sunk	$I_{I/O}$ = +20mA		1.3	V
V_{OH}	Output high level when 8 pins are sourced	2.7V< V_{DD} <5.5V	V_{DD}-1.3		

Note: In the above conditions, if multiple I/O pins are driven at the same time, the total current cannot exceed the absolute maximum ratings given in Table 3.2. In addition, when multiple I/O pins are driven at the same time, the current on the power/ground point is very large, which will cause the voltage drop to make the internal I/O voltage not reach the power supply voltage in the table, resulting in the drive current being less than the nominal value.

Table 3-18 Input/output AC characteristics

MODEx[1:0] configuration	Symbol	Parameter	Condition	Min.	Max.	Unit
10 (2MHz)	$F_{max(I/O)out}$	Maximum frequency	CL = 50pF, V_{DD} = 2.7-5.5V		2	MHz
	$t_{f(I/O)out}$	Output high to low fall time	CL = 50pF, V_{DD} = 2.7-5.5V		125	ns
	$t_{r(I/O)out}$	Output low to high rise time			125	ns
01 (10MHz)	$F_{max(I/O)out}$	Maximum frequency	CL = 50pF, V_{DD} = 2.7-5.5V		10	MHz
	$t_{f(I/O)out}$	Output high to low fall time	CL = 50pF, V_{DD} = 2.7-5.5V		25	ns
	$t_{r(I/O)out}$	Output low to high rise time			25	ns
11 (30MHz)	$F_{max(I/O)out}$	Maximum frequency	CL = 50pF, V_{DD} = 2.7-5.5V		30	MHz
	$t_{f(I/O)out}$	Output high to low fall time	CL = 50pF, V_{DD} = 2.7-5.5V		10	ns
	$t_{r(I/O)out}$	Output low to high rise time	CL = 50pF, V_{DD} = 2.7-5.5V		10	ns
	t_{EXTIpw}	The EXTI controller detects the pulse width of the external signal		10		ns

3.3.10 NRST Pin Characteristics

Table 3-19 External reset pin characteristics

Symbol	Parameter	Condition	Min.	Typ.	Max.	Unit
$V_{IL(NRST)}$	NRST input low-level voltage		-0.3		0.28*(V_{DD}-1.8)+0.6	V
$V_{IH(NRST)}$	NRST input high-level voltage		0.41*(V_{DD}-1.8)+1.3		V_{DD}+0.3	V
$V_{hys(NRST)}$	NRST Schmitt Trigger voltage hysteresis		150			mV
R_{PU}(1)	Weak pull-up equivalent resistance		35	45	55	kΩ

Note: 1. The pull-up resistor is a real resistor in series with a switchable PMOS implementation. The resistance of this PMOS/NMOS switch is very small (approximately 10%).

Circuit reference design and requirements:

Figure 3-5 Typical circuit of external reset pin

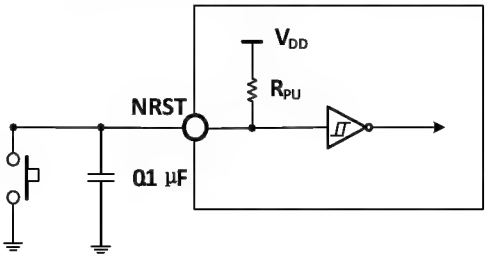

3.3.11 TIM Timer Characteristics

Table 3-20 TIMx characteristics

Symbol	Parameter	Condition	Min.	Max.	Unit

$t_{res(TIM)}$	Timer reference clock		1		$t_{TIMxCLK}$
		$f_{TIMxCLK}$ = 48MHz	20.8		ns
F_{EXT}	Timer external clock frequency on CH1 to CH4		0	$f_{TIMxCLK}/2$	MHz
		$f_{TIMxCLK}$ = 48MHz	0	24	MHz
R_{esTIM}	Timer resolution			16	bit
$t_{COUNTER}$	16-bit counter clock cycle when the internal clock is selected		1	65536	$t_{TIMxCLK}$
		$f_{TIMxCLK}$ = 48MHz	0.0208	1363	us
t_{MAX_COUNT}	Maximum possible count			65535	$t_{TIMxCLK}$
		$f_{TIMxCLK}$ = 48MHz		1363	s

3.3.12 I2C Interface Characteristics

Figure 3-6 I2C bus timing diagram

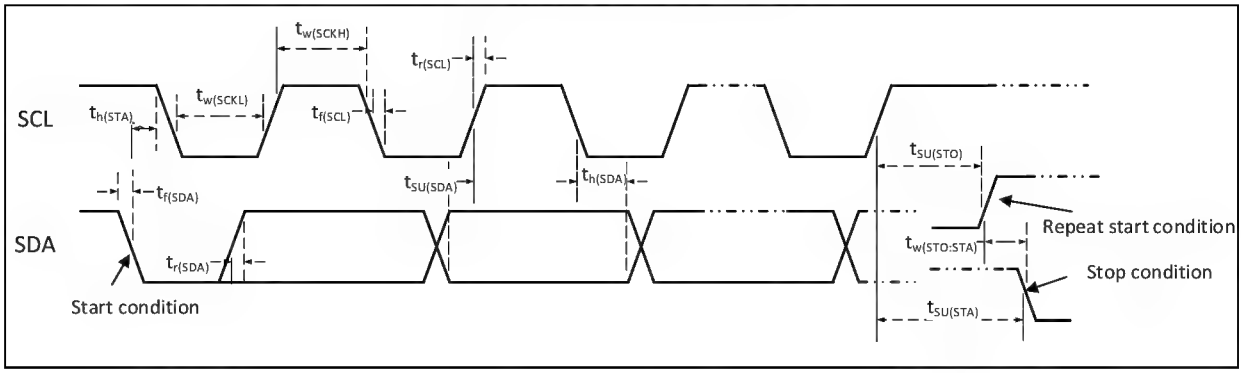

Table 3-21 I2C interface characteristics

Symbol	Parameter	Standard I2C		Fast I2C		Unit
		Min.	Max.	Min.	Max.	
$t_{w(SCKL)}$	SCL clock low time	4.7		1.2		us
$t_{w(SCKH)}$	SCL clock high time	4.0		0.6		us
$t_{SU(SDA)}$	SDA data setup time	250		100		ns
$t_{h(SDA)}$	SDA data hold time	0		0	900	ns
$t_{r(SDA)}/t_{r(SCL)}$	SDA and SCL rise time		1000	20		ns
$t_{f(SDA)}/t_{f(SCL)}$	SDA and SCL fall time		300			ns
$t_{h(STA)}$	Start condition hold time	4.0		0.6		us
$t_{SU(STA)}$	Repeated start condition setup time	4.7		0.6		us
$t_{SU(STO)}$	Stop condition setup time	4.0		0.6		us
$t_{w(STO:STA)}$	Time from stop condition to start condition (bus free)	4.7		1.2		us
C_b	Capacitive load for each bus		400		400	pF

3.3.13 SPI Interface Characteristics

Figure 3-7 SPI timing diagram in Master mode

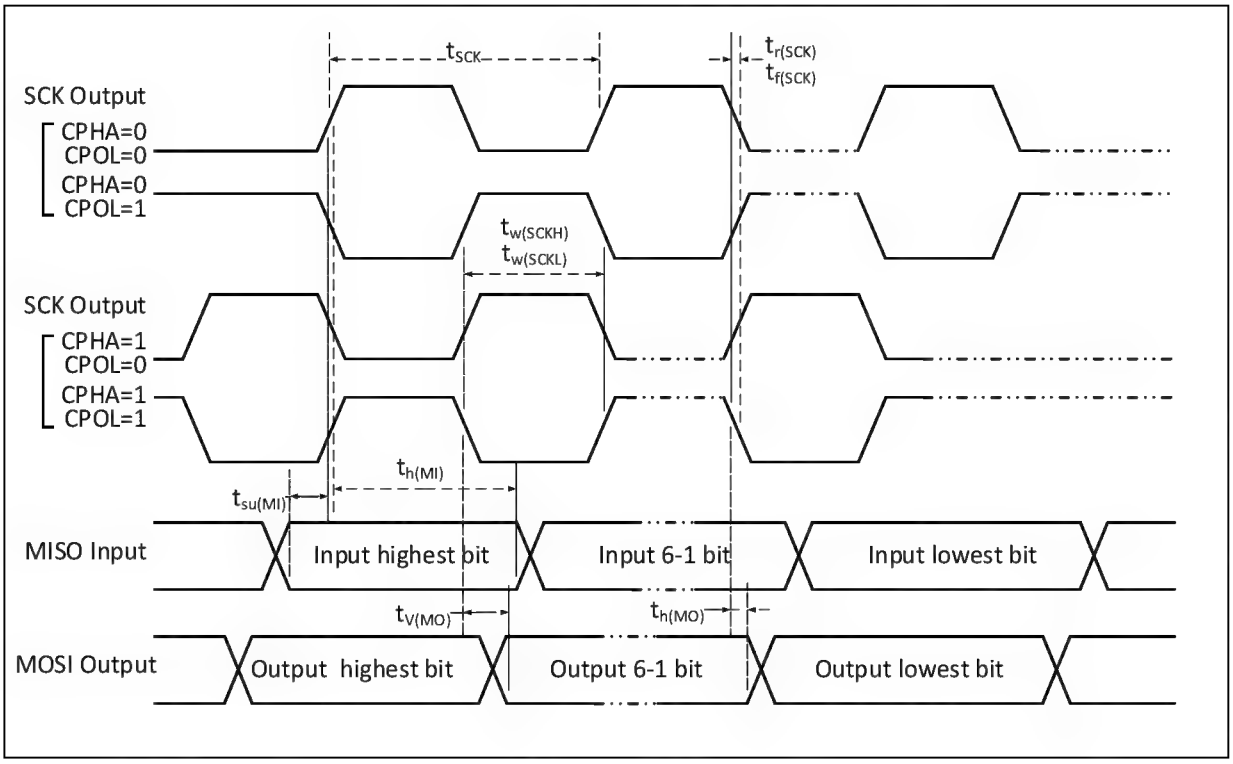

Figure 3-8-1 SPI timing diagram in Slave mode (CPHA = 0, CPOL=0)

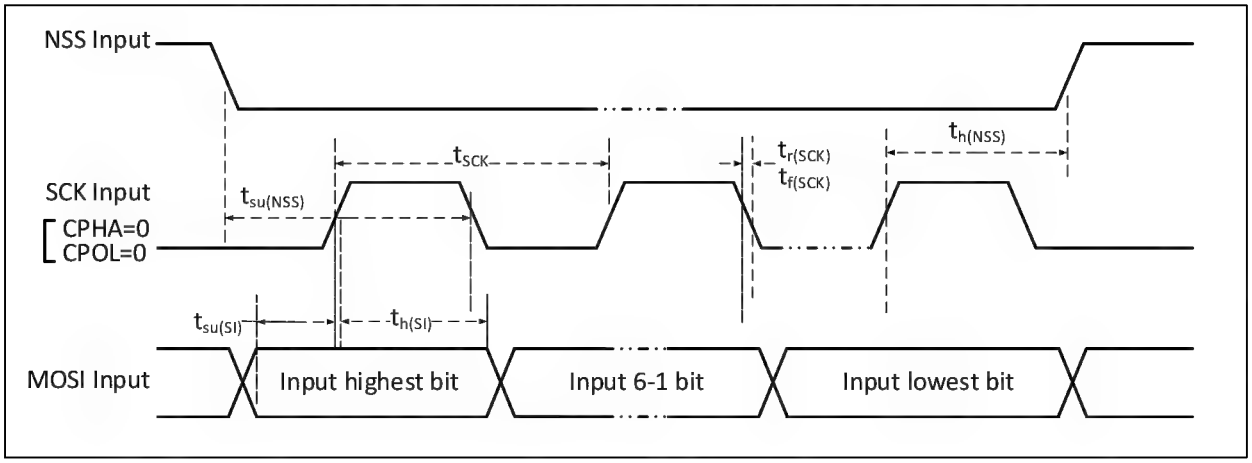

Figure 3-8-2 SPI timing diagram in Slave mode (CPHA = 0, CPOL=1)

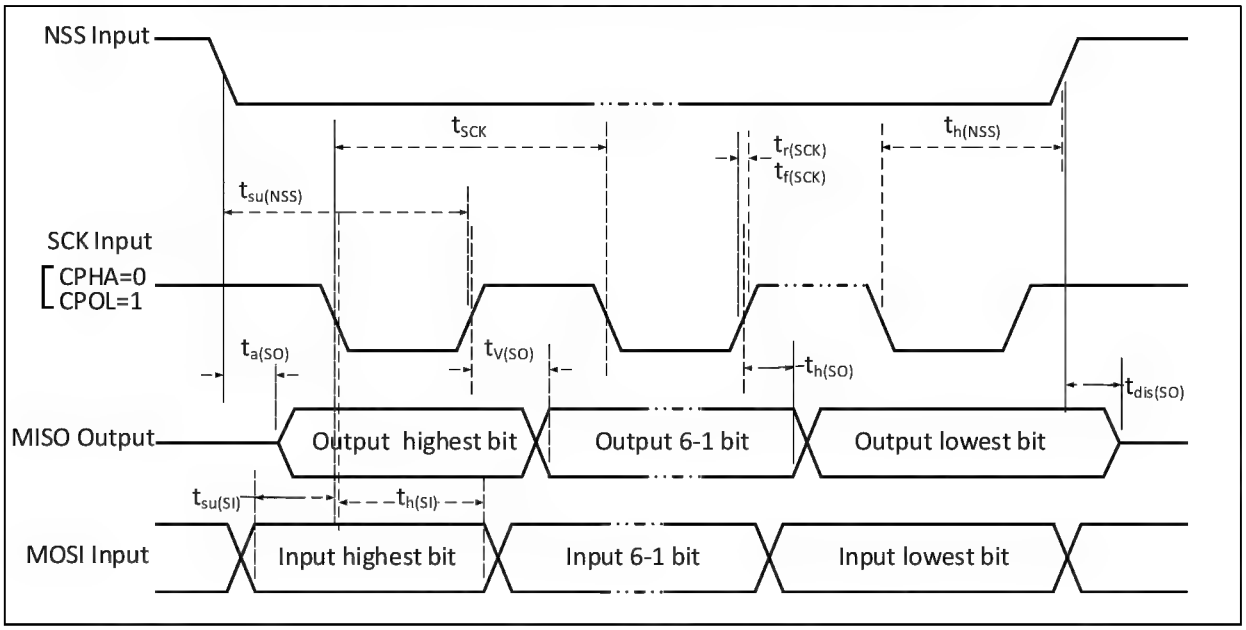

Figure 3-9-1 SPI timing diagram in Slave mode (CPHA=1, CPOL=0)

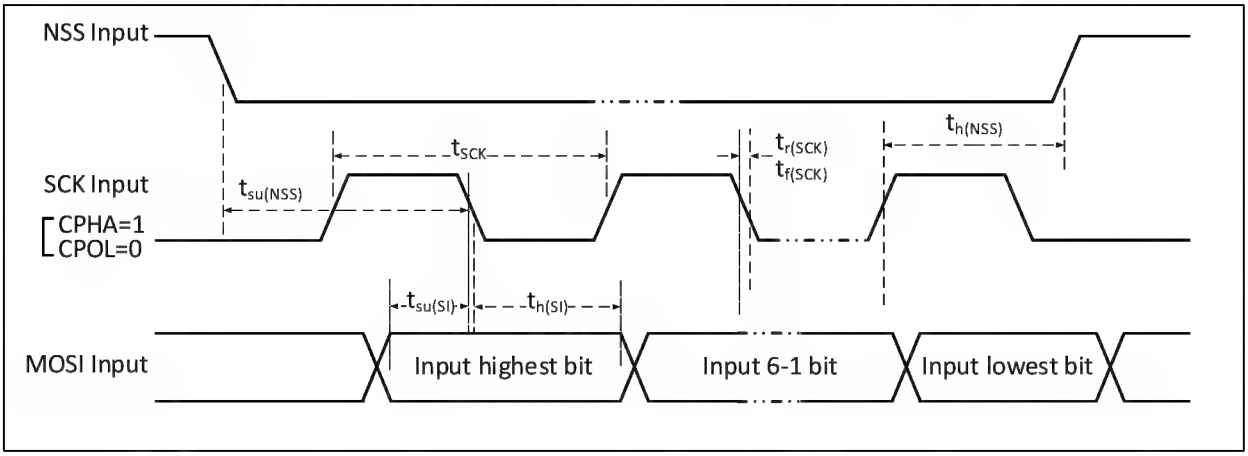

Figure 3-9-1 SPI timing diagram in Slave mode (CPHA=1, CPOL=1)

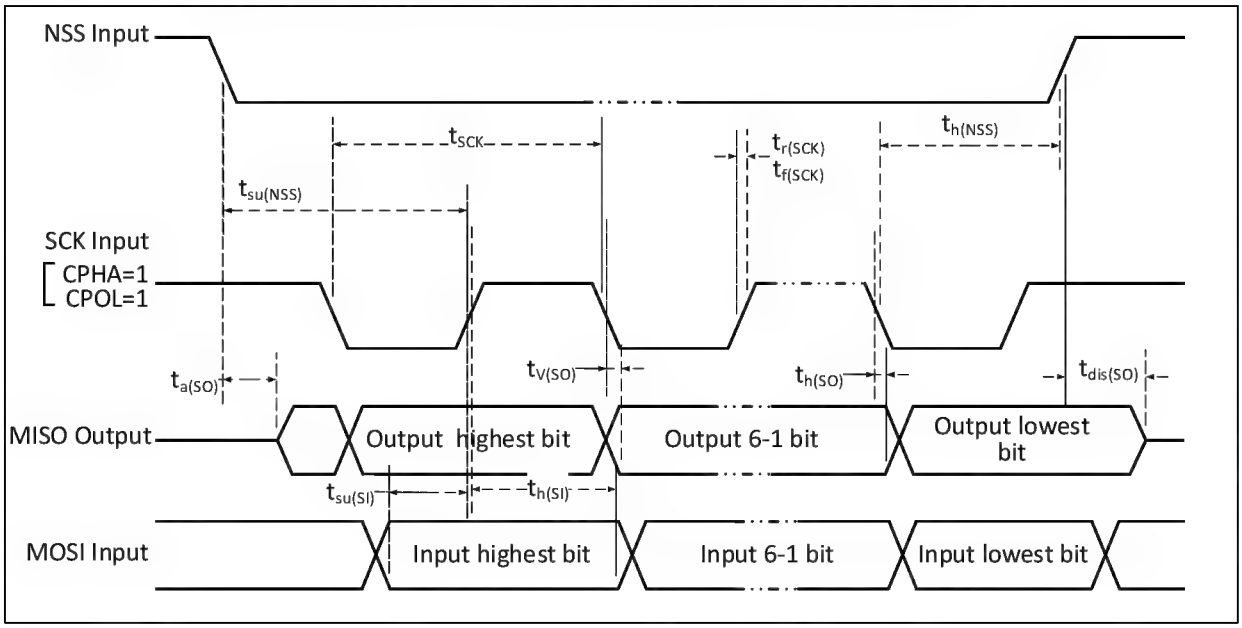

Table 3-22 SPI interface characteristics

Symbol	Parameter	Condition	Min.	Max.	Unit
f_{SCK}/t_{SCK}	SPI clock frequency	Master mode		24	MHz
		Slave mode		24	MHz
$t_{r(SCK)}/t_{f(SCK)}$	SPI clock rise and fall time	Load capacitance: C = 30pF		20	ns
$t_{SU(NSS)}$	NSS setup time	Slave mode	$2t_{PCLK}$		ns
$t_{h(NSS)}$	NSS hold time	Slave mode	$2t_{PCLK}$		ns
$t_{w(SCKH)}/t_{w(SCKL)}$	SCK high and low time	Master mode, f_{PCLK} = 48MHz, Prescaler factor = 2	30	70	ns
$t_{SU(MI)}$	Data input setup time	Master mode	5		ns
$t_{SU(SI)}$		Slave mode	5		ns
$t_{h(MI)}$	Data input hold time	Master mode	5		ns
$t_{h(SI)}$		Slave mode	4		ns
$t_{a(SO)}$	Data output access time	Slave mode, f_{PCLK} = 24MHz	0	$1t_{PCLK}$	ns
$t_{dis(SO)}$	Data output disable time	Slave mode	0	10	ns
$t_{V(SO)}$	Data output valid time	Slave mode (After enable edge)		5	ns
$t_{V(MO)}$		Master mode (After enable edge)		5	ns
$t_{h(SO)}$	Data output hold time	Slave mode (After enable edge)	2		ns
$t_{h(MO)}$		Master mode (After enable edge)	0		ns

3.3.14 10-bit ADC Characteristics

Table 3-23 ADC characteristics

Symbol	Parameter	Condition	Min.	Typ.	Max.	Unit
V_{DD}	Supply voltage		2.8		5.5	V
I_{DD}	Supply current			370		uA

f_{ADC}	ADC clock frequency	V_{DD} = 2.8 to 5.5V	1		6	MHz
		V_{DD} = 3.2 to 5.5V	1		12	
		V_{DD} = 4.5 to 5.5V	1		24	
V_{AIN}	Conversion voltage range		V_{SS}		V_{DD}	V
C_{ADC}	Internal sample and hold capacitor			3		pF
f_S	Sampling rate	f_{ADC} = 4 MHz			285	KHz
		f_{ADC} = 6 MHz			430	
		f_{ADC} = 12 MHz			857	
		f_{ADC} = 24 MHz			1710	
t_s	Sampling time	f_{ADC} = 4 MHz		0.75		us
		f_{ADC} = 6 MHz		0.5		
		f_{ADC} = 12 MHz		0.25		
t_{STAB}	Power-on time			7		us
t_{CONV}	Total conversion time (including sampling time)	f_{ADC} = 4 MHz	3.5			us
		f_{ADC} = 6 MHz	2.33			us
		f_{ADC} = 12 MHz	1.17			us
		-		14		$1/f_{ADC}$

Note: Above parameters are guaranteed by design.

Table 3-24 ADC error (f_{ADC} = 12MHz:R_{AIN} < 10kΩ,V_{DD} > 2.9V)(f_{ADC} = 24MHz:R_{AIN} < 3kΩ,V_{DD} = 5V)

Symbol	Parameter	Condition	Min.	Typ.	Max.	Unit
ET	Total data deviation	f_{ADC} = 12 MHz		2	6	LSB
ETF24	f_{ADC} = 24MHz total data deviation	f_{ADC} = 24 MHz		3	8	
EO	Misalignment error	f_{ADC} = 12 MHz		1	5	
EG	Gain error	f_{ADC} = 12 MHz		1	2	
ED	Differential nonlinearity error	f_{ADC} = 12 MHz		0.5	2	
EL	Integral nonlinearity error	f_{ADC} = 12 MHz		0.6	2.5	

Note: Source simulation.

C_p represents the parasitic capacitance on the PCB and the pad (about 5pF), which may be related to the quality of the pad and PCB layout. A larger C_p value will reduce the conversion accuracy, the solution is to reduce the f_{ADC} value.

Figure 3-10 ADC typical connection diagram

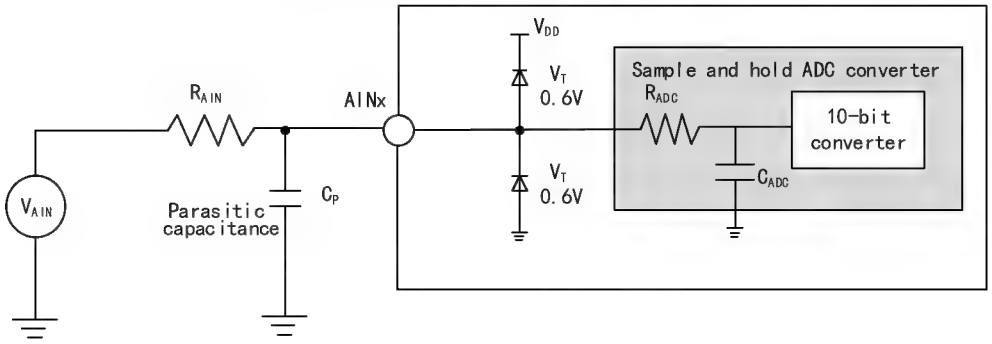

Figure 3-11 Analog power supply and decoupling circuit reference

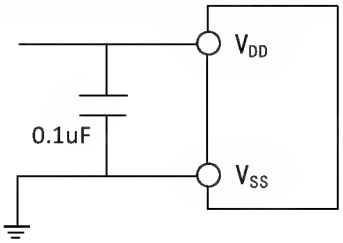

3.3.15 OPA Characteristics

Table 3-25 OPA characteristics

Symbol	Parameter	Condition	Min.	Typ.	Max.	Unit
V_{DD}	Supply voltage		2.8		5.5	V
C_{MIR}	Common mode input voltage		0		V_{DD}	V
$V_{IOFFSET}$	Input offset voltage			±3	±13	mV
I_{LOAD}	Drive current				1.5	mA
$I_{DDOPAMP}$	Current consumption	No load, static mode		273		uA
C_{MRR}(1)	Common mode rejection ratio	@1KHz		81		dB
P_{SRR}(1)	Power supply rejection ratio	@1KHz		88		dB
A_V(1)	Open loop gain	C_{LOAD} = 50pF		105		dB
G_{BW}(1)	Unit gain bandwidth	C_{LOAD} = 50pF		12		MHz
P_M(1)	Phase margin	C_{LOAD} = 50pF		75		deg
S_R(1)	Slew rate limited	C_{LOAD} = 50pF		7.7		V/us
t_{WAKU}(1)	Setup time from shutdown to wake up, 0.1%	Input $V_{DD}/2$, C_{LOAD}=50pF, R_{LOAD}=4kΩ		520		ns
R_{LOAD}	Resistive load		4			kΩ
C_{LOAD}	Capacitive load				50	pF
V_{OHSAT}(2)	High saturation output voltage	R_{LOAD} = 4kΩ, input V_{DD}	V_{DD}-180			mV
		R_{LOAD} = 20kΩ, input V_{DD}	V_{DD}-36			
V_{OLSAT}(2)	Low saturation output voltage	R_{LOAD} = 4kΩ, input 0			5	mV
		R_{LOAD} = 20kΩ, input 0			5	
EN(1)	Equivalent input voltage noise	R_{LOAD} = 4kΩ, @1KHz		83		$\frac{nv}{\sqrt{Hz}}$
		R_{LOAD} = 4kΩ, @10KHz		28		

Note: 1. Design parameters are guaranteed.

2. The load current limits the saturated output voltage.

Chapter 4 Package and Ordering Information

Packages

Package Form	Body Size	Pin Pitch		Package Description	Order Model
TSSOP20	4.4*6.5mm	0.65mm	25.6mil	Thin Shrink Small Outline Package	CH32V003F4P6
QFN20	3.0*3.0mm	0.4mm	15.7mil	Quad Flat No-lead Package	CH32V003F4U6
SOP16	3.9*10.0mm	1.27mm	50mil	Small Outline Package	CH32V003A4M6
SOP8	3.9*5.0mm	1.27mm	50mil	Small Outline Package	CH32V003J4M6

Note: All dimensions are in millimeters. The pin center spacing values are nominal values, with no error. Other than that, the dimensional error is not greater than the greater of ±0.2mm or 10%.

Figure 4-1 TSSOP20 package

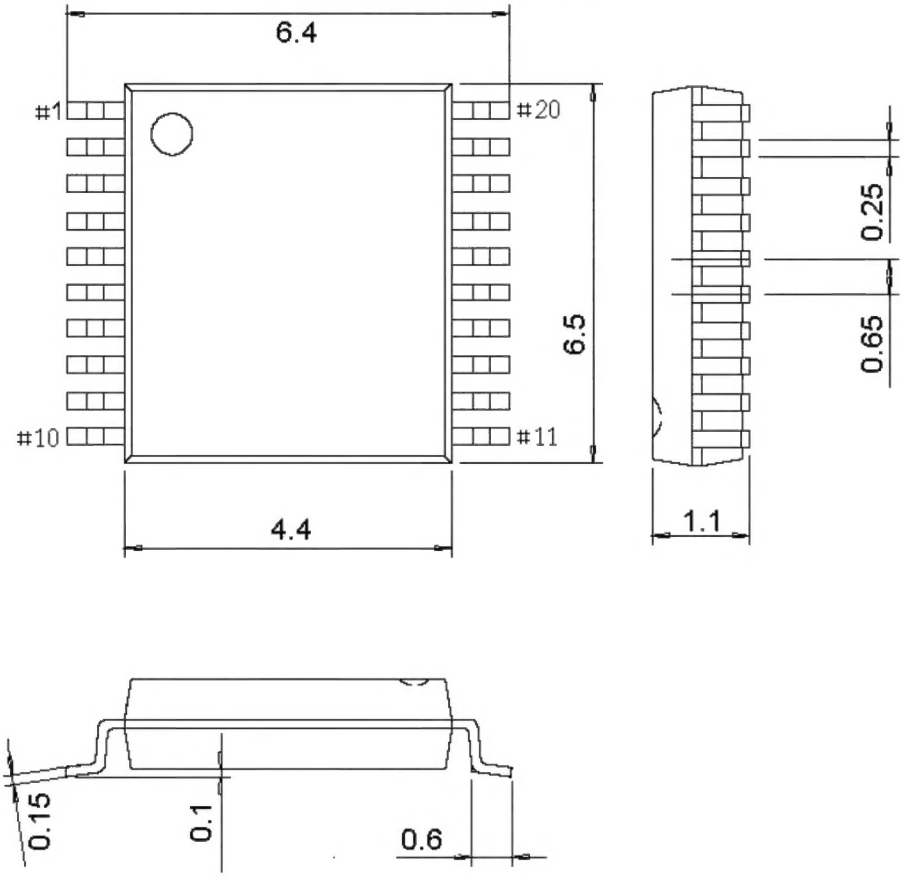

Figure 4-2 QFN20 package

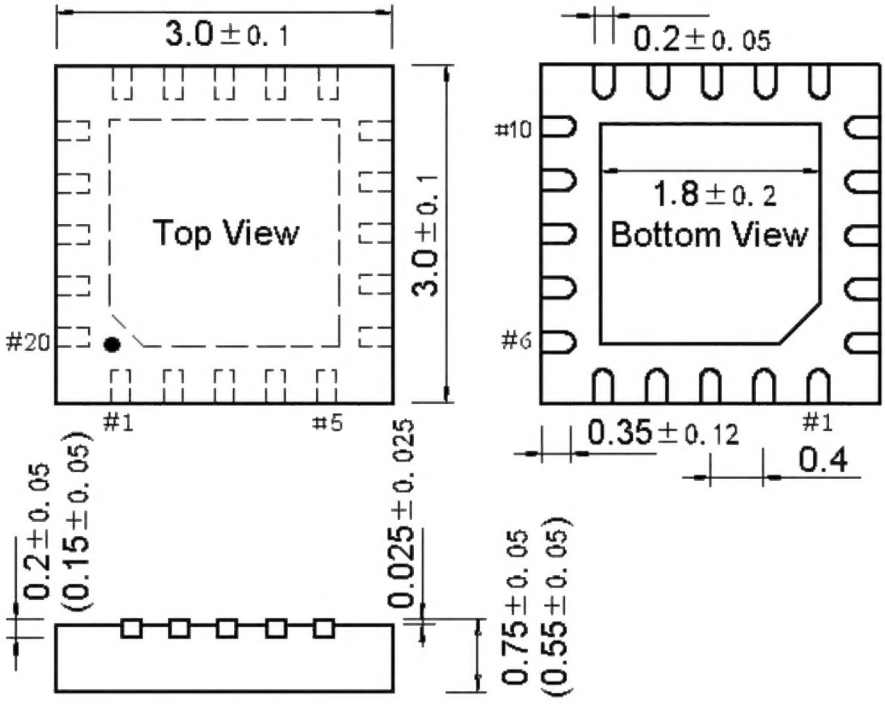

Figure 4-3 SOP16 package

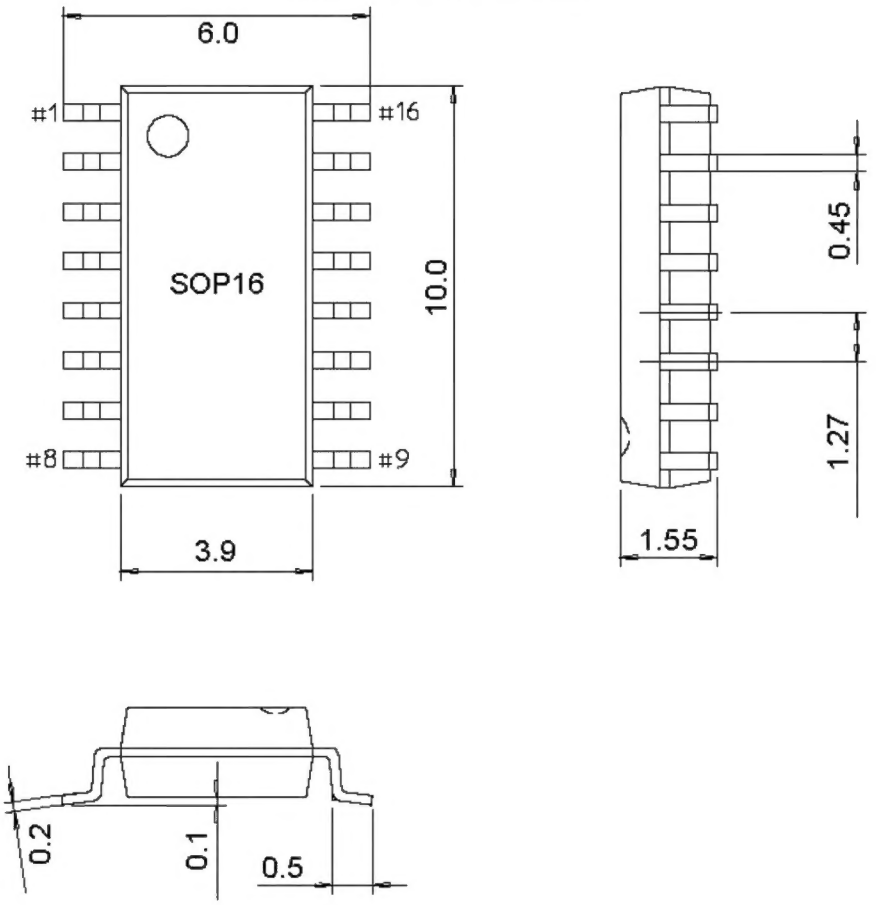

Figure 4-4 SOP8 package

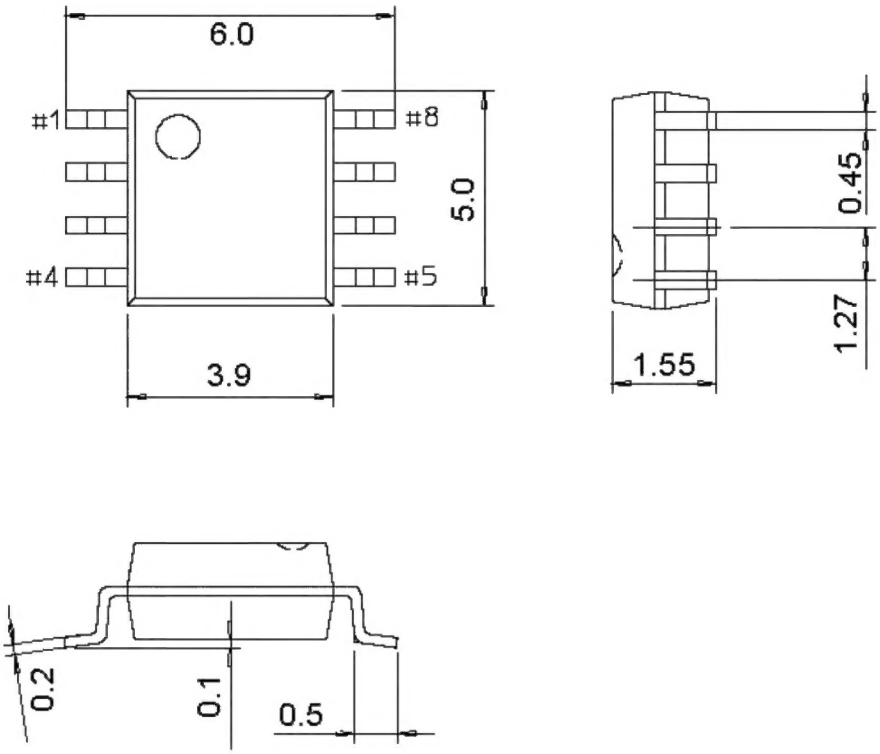

Series Product Naming Rules

Example: CH32 V 3 03 R 8 T 6

Device family

F = ARM-based, general-purpose MCU
V = QingKe RISC-V-based, general-purpose MCU
L = QingKe RISC-V-based, low power MCU
X = QingKe RISC-V-based, Dedicated architecture or special IO

Product type

0 = QingKe V2/V4 core, main frequency @48M
1 = M3/ QingKe V3/V4 core, main frequency @72M
2 = M3/ QingKe V4 non-floating-point core, main frequency @144M
3 = QingKe V4F floating-point core, main frequency @144M

Device subfamily

03 = General-purpose
05 = Connectivity (USB high-speed, SDIO, dual CAN)
07 = Interconnectivity (USB high-speed, dual CAN, Ethernet, DVP, SDIO, FSMC)
08 = Wireless (BLE5.X, CAN, USB, Ethernet)
35 = Connectivity (USB, USB PD)

Pin count

J = 8 pins A = 16 pins F = 20 pins
G = 28 pins K = 32 pins T = 36 pins
C = 48 pins R = 64 pins W = 68 pins
V = 100 pins Z = 144 pins

Flash memory size

4 = 16 Kbytes of Flash memory
6 = 32 Kbytes of Flash memory
7 = 48 Kbytes of Flash memory
8 = 64 Kbytes of Flash memory
B = 128 Kbytes of Flash memory
C = 256 Kbytes of Flash memory

Package

T = LQFP U = QFN R = QSOP P = TSSOP M = SOP

Temperature range

6 = -40°C~85°C (industrial-grade)
7 = -40°C~105°C (automotive-grade 2)
3 = -40°C~125°C (automotive-grade 1)
D = -40°C~150°C (automotive-grade 0)